UK

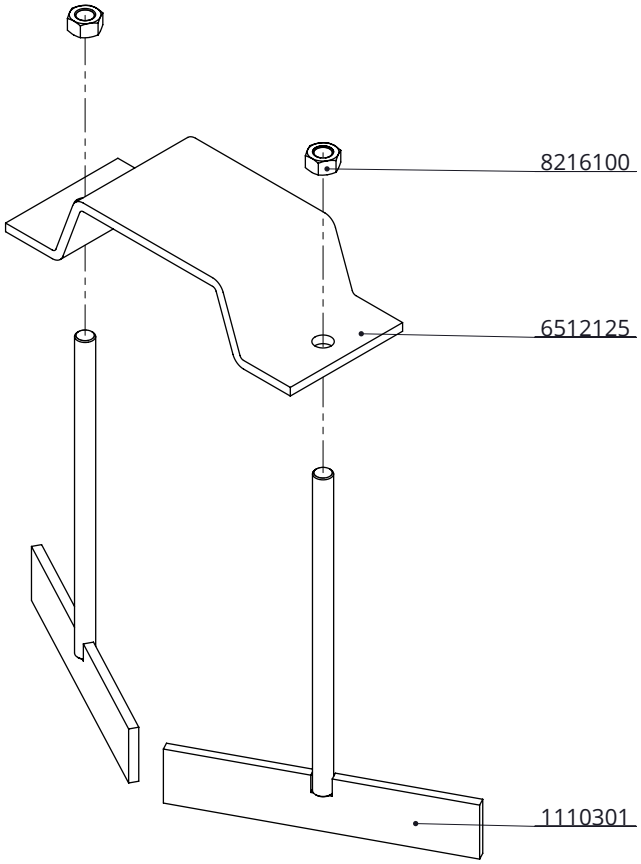

6512175

Item-nr.	Description	Number
1110301	T-bolt M16/28x25cm, excl. nut	2
6512125	endmarker	1
8216100	hexagon nut M16 galv.	2

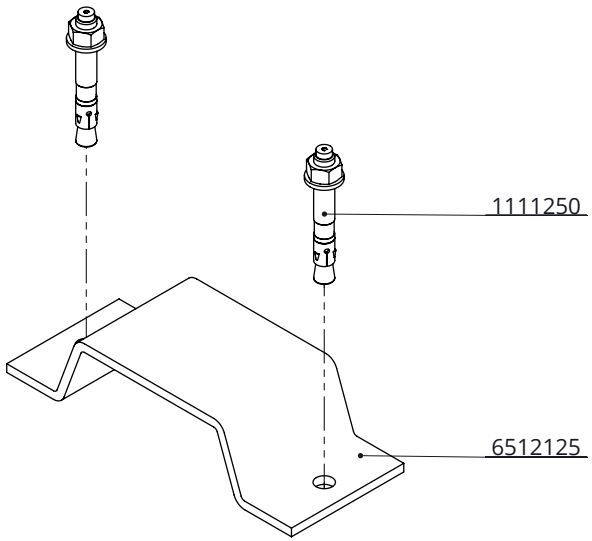

6512170

Item-nr.	Description	Number
1111250	floor anchor, hot dip galv. - M16x120	2
6512125	endmarker	1

scraper stop

spinder
DAIRY HOUSING CONCEPTS

Number:	651217x-O
Unit:	mm
Date:	11-4-2018

Drawing remains our property and may not be reproduced, shown or entrust to third party or used otherwise.
No rights can be derived from this drawing.

UK

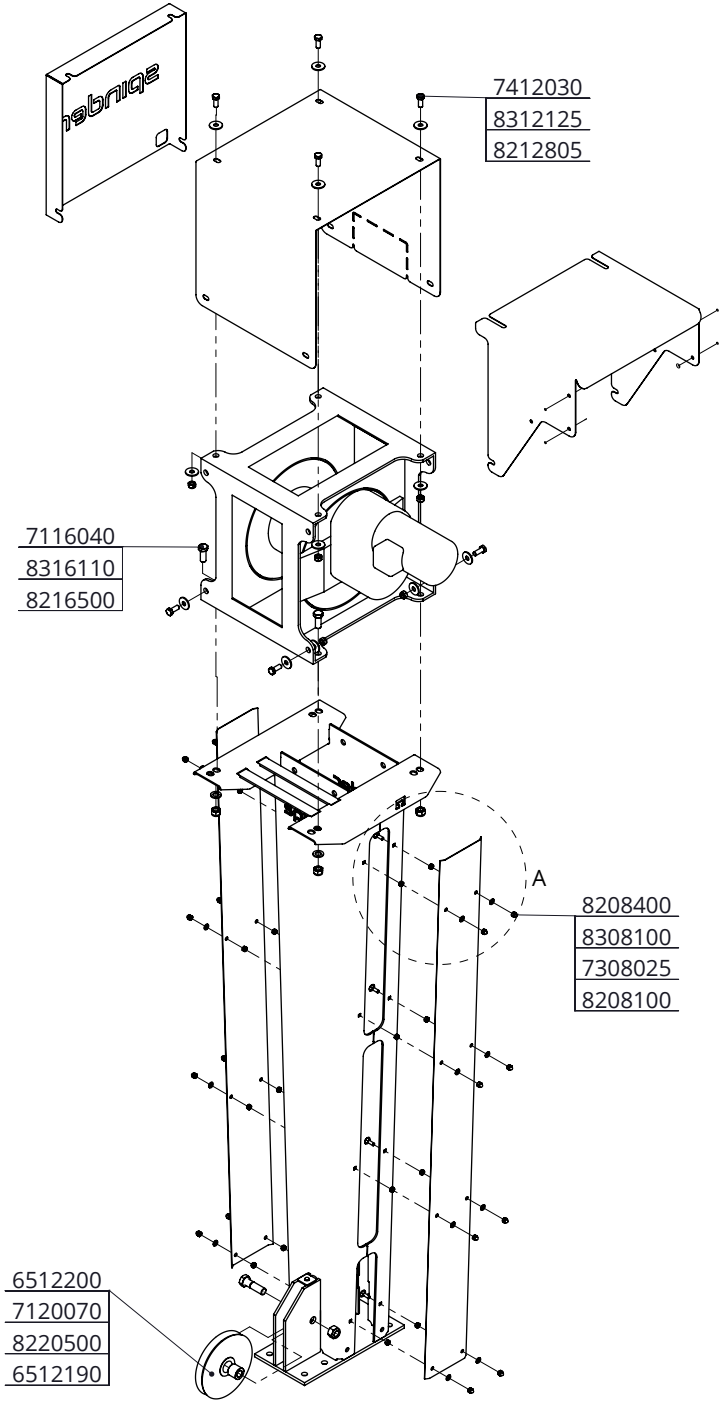

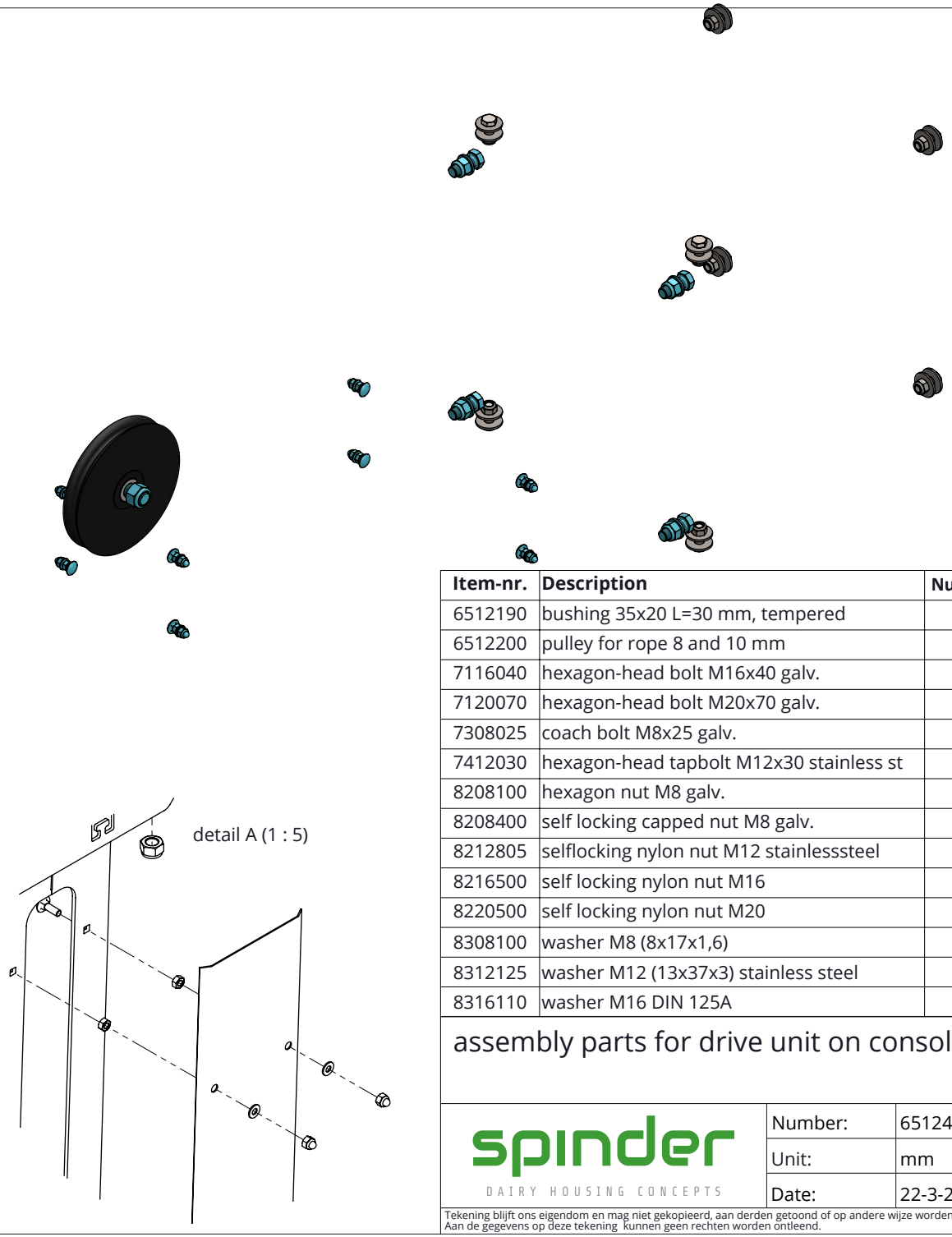

Item-nr.	Description	Number
6512190	bushing 35x20 L=30 mm, tempered	1
6512200	pulley for rope 8 and 10 mm	1
7116040	hexagon-head bolt M16x40 galv.	4
7120070	hexagon-head bolt M20x70 galv.	1
7308025	coach bolt M8x25 galv.	16
7412030	hexagon-head tapbolt M12x30 stainless st	8
8208100	hexagon nut M8 galv.	16
8208400	self locking capped nut M8 galv.	16
8212805	selflocking nylon nut M12 stainlesssteel	8
8216500	self locking nylon nut M16	4
8220500	self locking nylon nut M20	1
8308100	washer M8 (8x17x1,6)	16
8312125	washer M12 (13x37x3) stainless steel	16
8316110	washer M16 DIN 125A	4

assembly parts for drive unit on console

spinder
DAIRY HOUSING CONCEPTS

Number:	6512415-O
Unit:	mm
Date:	22-3-2018

Tekening blijft ons eigendom en mag niet gekopieerd, aan derden getoond of op andere wijze worden gebruikt.
Aan de gegevens op deze tekening kunnen geen rechten worden ontleend.

UK

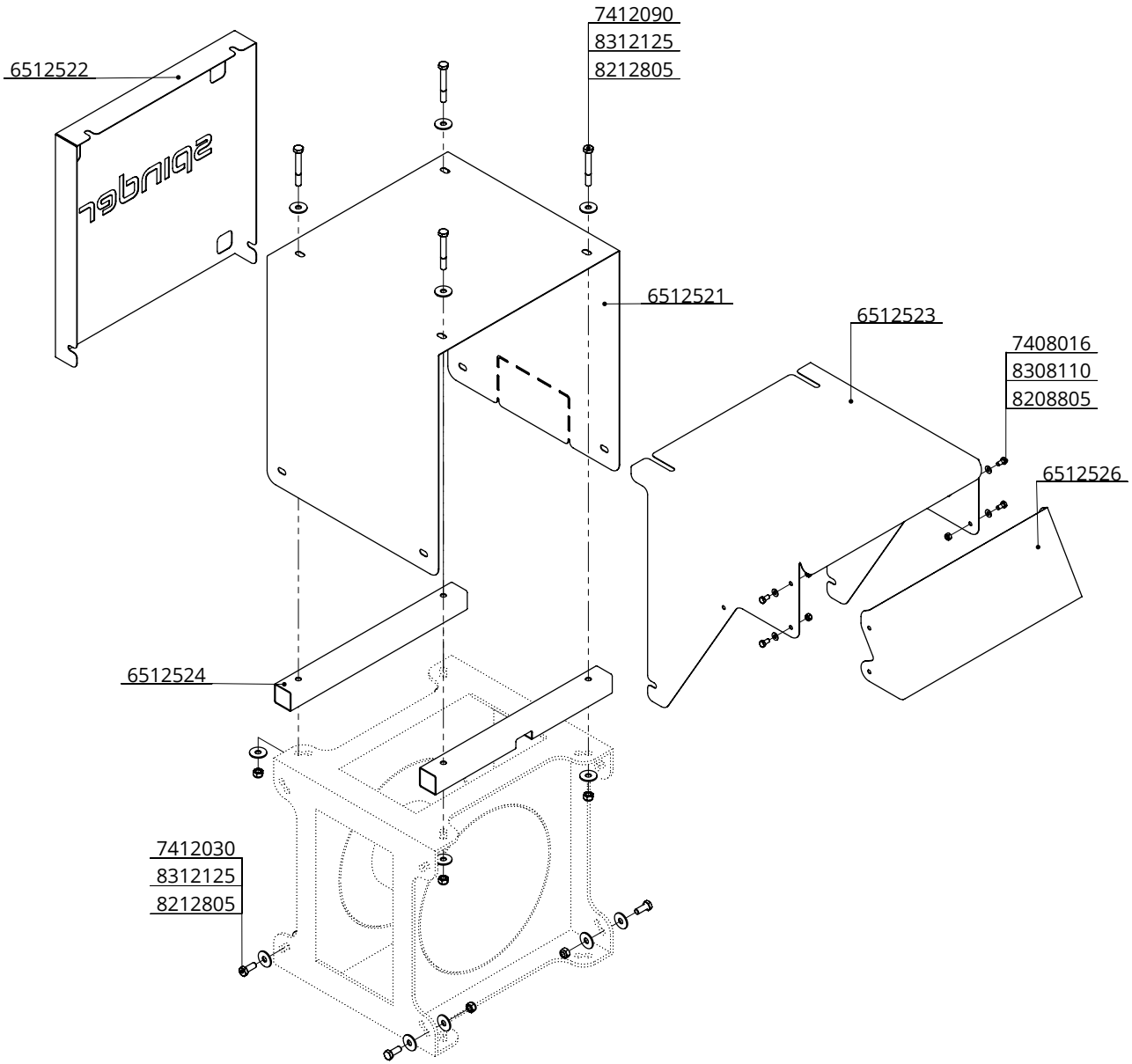

Item-nr.	Description	Number
6512521	cover stainless steel, drive unit big	1
6512522	cover stainless steel, SPINDER big	1
6512523	cover stainless steel, motor big	1
6512524	support tube for st.steel protect. hood	2
6512526	rain protection hood, motor big	1
7408016	hexagon-head tap bolt M8x16 stainless st	4
7412030	hexagon-head tapbolt M12x30 stainless st	4
7412090	hexagon-head bolt M12x90 stainless st	4
8208805	self locking nylon nut M8, stainl.steel	4
8212805	selflocking nylon nut M12 stainlesssteel	8
8308110	washer M8 stainless steel	4
8312125	washer M12 (13x37x3) stainless steel	16

cover drive unit big, stainless steel

spinder
DAIRY HOUSING CONCEPTS

Number:	6512520-O
Unit:	mm
Date:	23-8-2019

Drawing remains our property and may not be reproduced, shown or entrust to third party or used otherwise.
No rights can be derived from this drawing.

UK

Item-nr.	Description	Number
1111240	floor anchor, hot dip galv. - M12x106	4
6573410	housing for corner wheel 280mm	1
6573416	closing piece	1
6573418	angle-iron 2x hole	2
6573462	cornerwheel GY nr. 5 30mm	1
6584252	parts set corner wheel	1

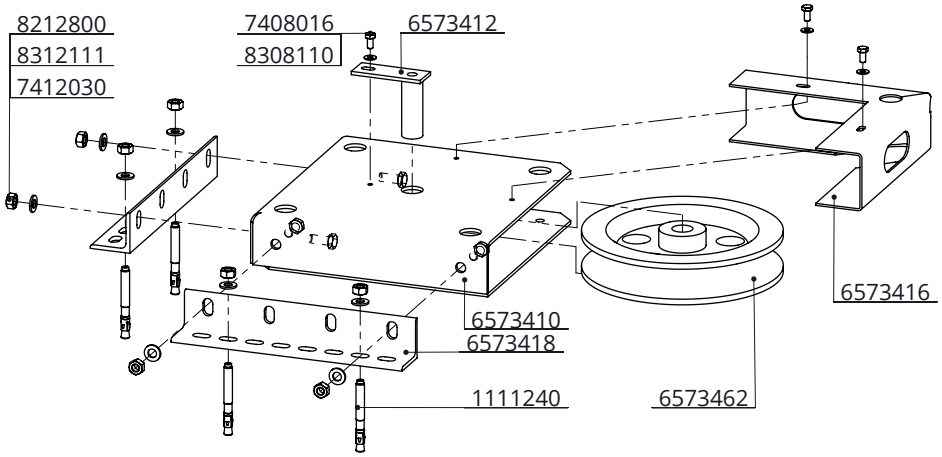

6584150

Item-nr.	Description	Number
6573410	housing for corner wheel 280mm	1
6573416	closing piece	1
6573418	angle-iron 2x hole	2
6573462	cornerwheel GY nr. 5 30mm	1
6584245	T-anchor M12x250 stainless for grid fl.	4
6584252	parts set corner wheel	1

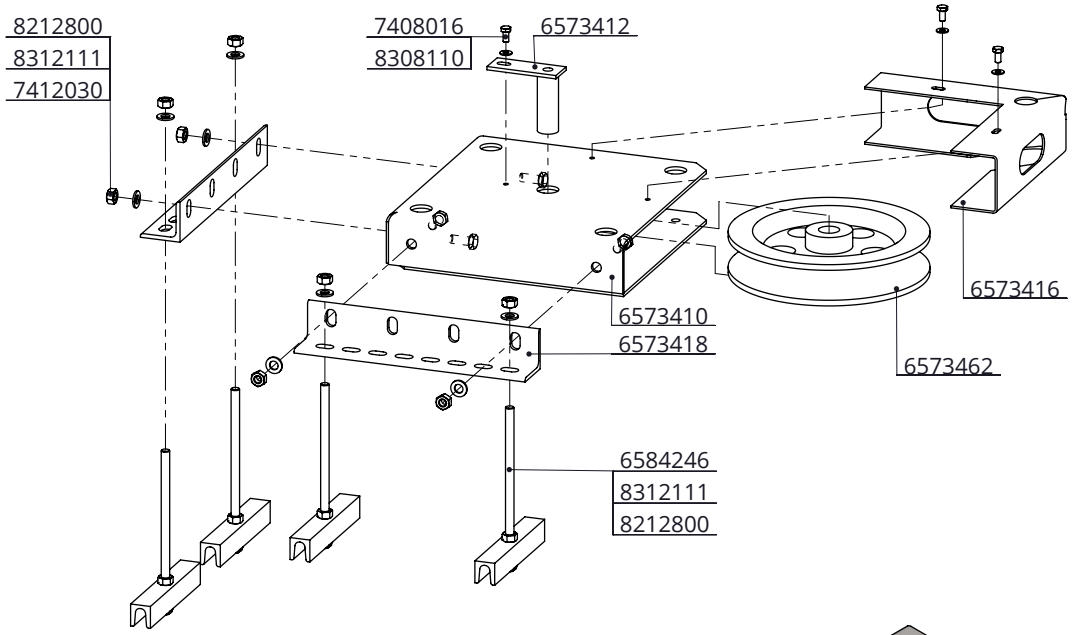

6584250

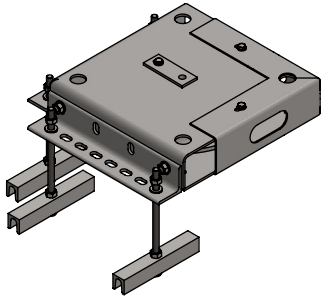

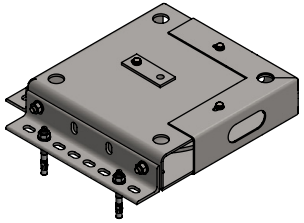

parts set corner wheel: 6584252

Item-nr.	Description	Number
6573412	shaft 95mm	1
7408016	hexagon-head tap bolt M8x16 stainless st	3
7412030	hexagon-head tapbolt M12x30 stainless st	4
8212800	hexagon nut M12 stainless steel	4
8308110	washer M8 stainless steel	3
8312111	washer M12 (13x24x2,5) stainless steel	4

corner wheel (chain) complete

spinder
DAIRY HOUSING CONCEPTS

Number:	6584X50-O
Unit:	mm
Date:	28-3-2018

Tekening blijft ons eigendom en mag niet gekopieerd, aan derden getoond of op andere wijze worden gebruikt.
Aan de gegevens op deze tekening kunnen geen rechten worden ontleend.

UK

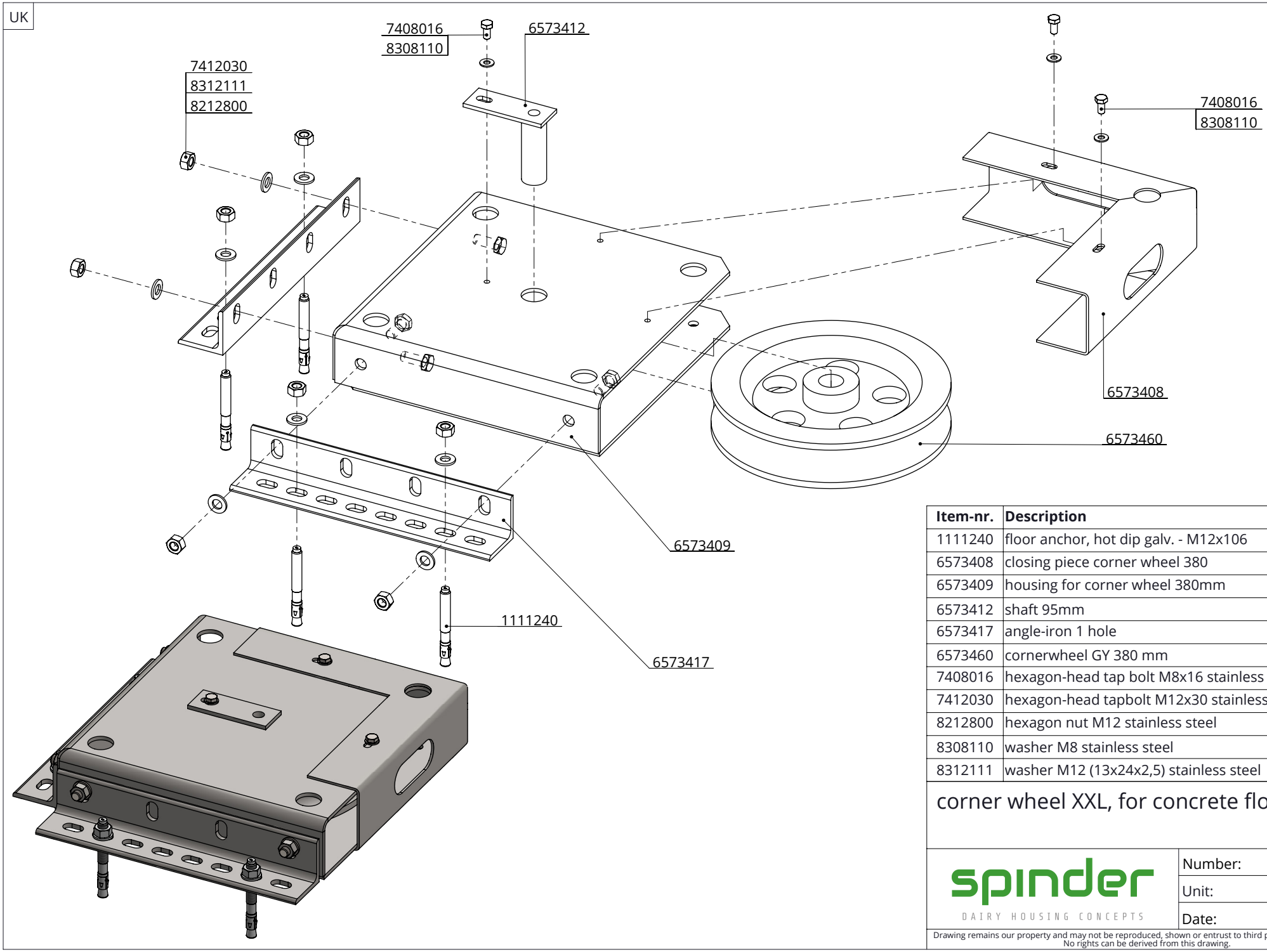

Item-nr.	Description	Number
1111240	floor anchor, hot dip galv. - M12x106	4
6573408	closing piece corner wheel 380	1
6573409	housing for corner wheel 380mm	1
6573412	shaft 95mm	1
6573417	angle-iron 1 hole	2
6573460	cornerwheel GY 380 mm	1
7408016	hexagon-head tap bolt M8x16 stainless st	3
7412030	hexagon-head tapbolt M12x30 stainless st	4
8212800	hexagon nut M12 stainless steel	4
8308110	washer M8 stainless steel	3
8312111	washer M12 (13x24x2,5) stainless steel	4

corner wheel XXL, for concrete floor

spinder
DAIRY HOUSING CONCEPTS

Number:	6584153-O
Unit:	mm
Date:	4-7-2017

Drawing remains our property and may not be reproduced, shown or entrust to third party or used otherwise.
No rights can be derived from this drawing.